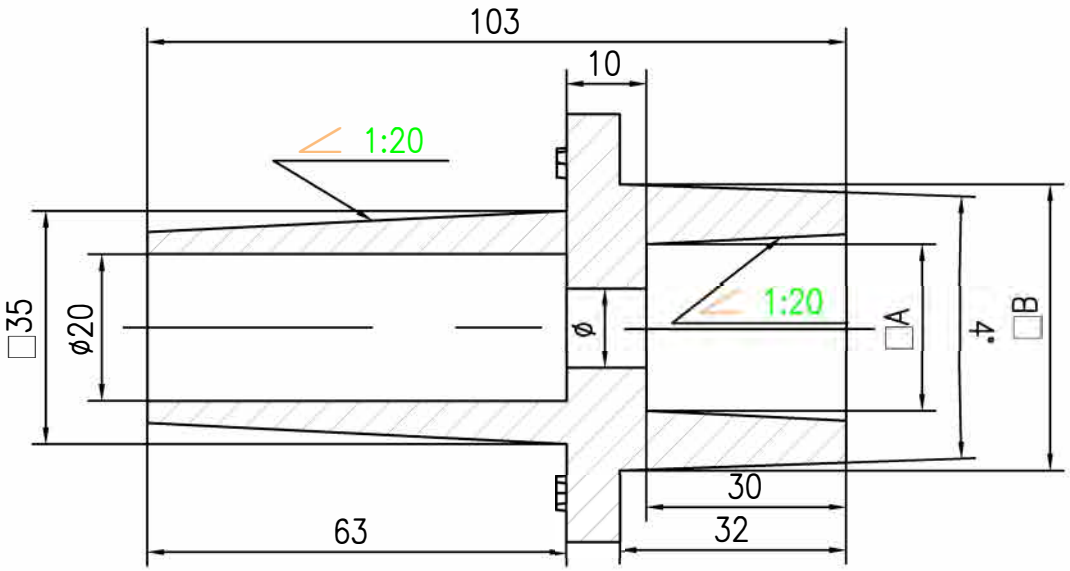

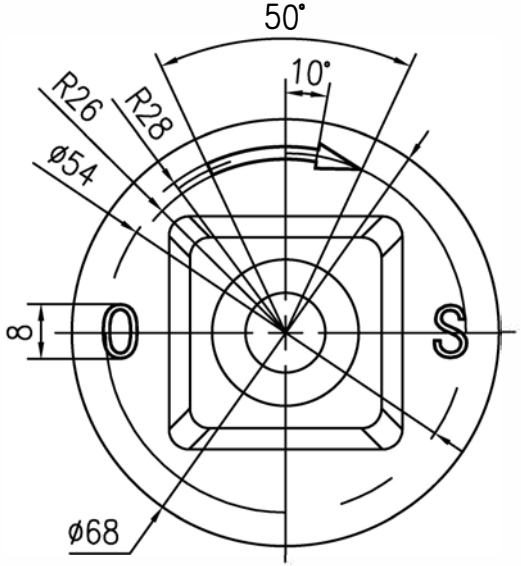

AES
Automated Environmental Systems

Automated Environmental Systems Ltd., Unit B,
Anglian Lane, Bury St. Edmunds, Suffolk, IP32 6SR
01284 658770 | sales@automatedenvironmentalsystems.co.uk

	□ A	□ B	Φ
DN40-DN50	□ 14	□ 30	10
DN65-DN80	□ 17	□ 36	10
DN100-DN125-DN150	□ 19	□ 41	10
DN200	□ 24	□ 51	10
DN250-DN300	□ 27	□ 58	12

GGG50

Head cap