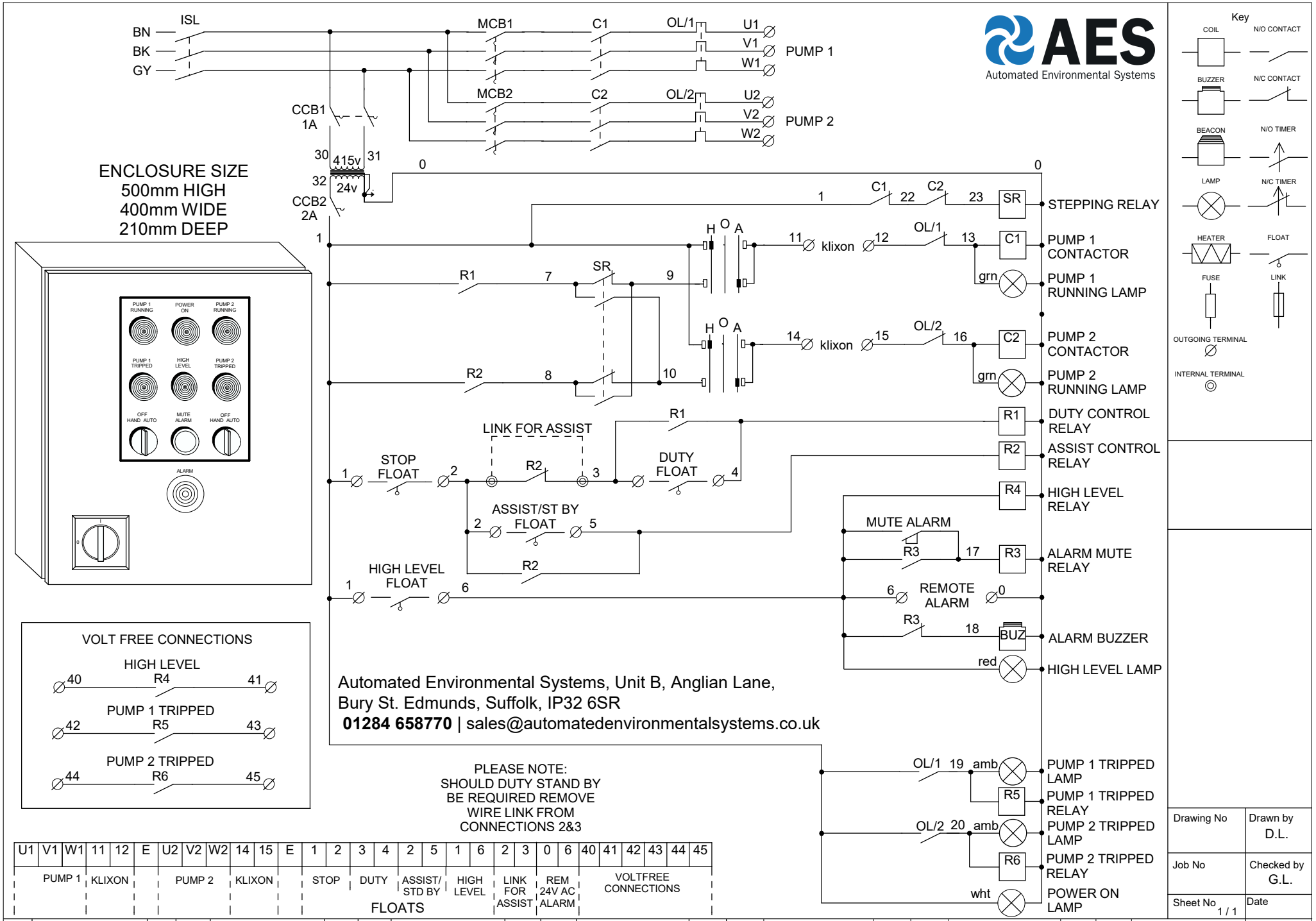
AES
Automated Environmental Systems
ISL
BN
BK
GY
MCB1
C1
OL/1
U1
V1
W1
PUMP 1
MCB2
C2
OL/2
U2
V2
W2
PUMP 2
CCB1
1A
30
415v
31
32
24v
CCB2
2A
0
ENCLOSURE SIZE
500mm HIGH
400mm WIDE
210mm DEEP
PUMP 1 RUNNING
POWER ON
PUMP 2 RUNNING
PUMP 1 TRIPPED
HIGH LEVEL
PUMP 2 TRIPPED
OFF HAND AUTO
MUTE ALARM
OFF HAND AUTO
ALARM
SR
STEPPING RELAY
H O A
klixon
OL/1
C1
PUMP 1 CONTACTOR
grn
PUMP 1 RUNNING LAMP
R1
SR
OL/2
C2
PUMP 2 CONTACTOR
R2
PUMP 2 RUNNING LAMP
LINK FOR ASSIST
DUTY CONTROL RELAY
ASSIST CONTROL RELAY
STOP FLOAT
DUTY FLOAT
HIGH LEVEL RELAY
ASSIST/ST BY FLOAT
MUTE ALARM
R3
ALARM MUTE RELAY
HIGH LEVEL FLOAT
REMOTE ALARM
BUZ
ALARM BUZZER
red
HIGH LEVEL LAMP
VOLT FREE CONNECTIONS
HIGH LEVEL
40 R4 41
PUMP 1 TRIPPED
42 R5 43
PUMP 2 TRIPPED
44 R6 45
Automated Environmental Systems, Unit B, Anglian Lane,
Bury St. Edmunds, Suffolk, IP32 6SR
01284 658770 | sales@automatedenvironmentalsystems.co.uk
PLEASE NOTE:
SHOULD DUTY STAND BY
BE REQUIRED REMOVE
WIRE LINK FROM
CONNECTIONS 2&3
amb
PUMP 1 TRIPPED LAMP
PUMP 1 TRIPPED RELAY
PUMP 2 TRIPPED LAMP
PUMP 2 TRIPPED RELAY
wht
POWER ON LAMP
U1 V1 W1 11 12 E U2 V2 W2 14 15 E 1 2 3 4 2 5 1 6 2 3 0 6 40 41 42 43 44 45
PUMP 1
KLIXON
PUMP 2
KLIXON
STOP
DUTY
ASSIST/ STD BY
HIGH LEVEL
FLOATS
LINK FOR ASSIST
REM 24V AC ALARM
VOLTFREE CONNECTIONS
Key
COIL
N/O CONTACT
BUZZER
N/C CONTACT
BEACON
N/O TIMER
LAMP
N/C TIMER
HEATER
FLOAT
FUSE
LINK
OUTGOING TERMINAL
INTERNAL TERMINAL
Drawing No
Drawn by D.L.
Job No
Checked by G.L.
Sheet No 1 / 1
Date
Rev No Description Date